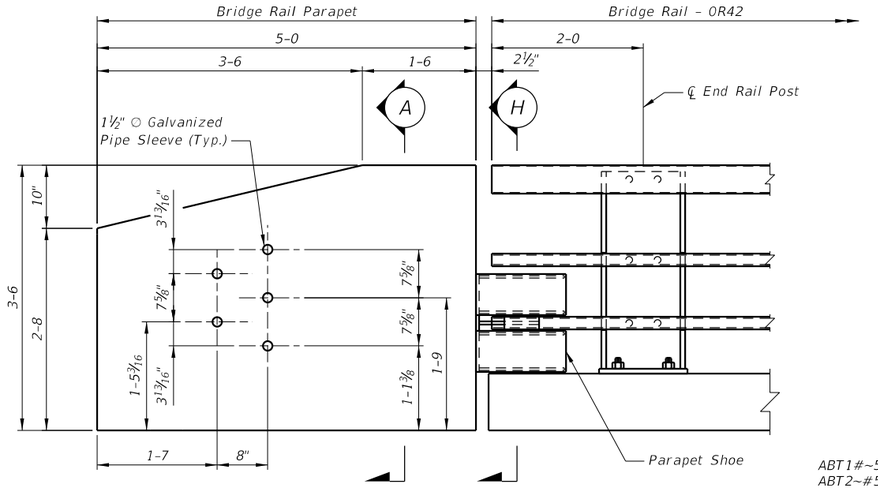

INSIDE ELEVATION OF PARAPET

NOTE: Reinforcing steel shown is for a typical stub abutment. For turnback wingwalls substitute ABT1~#5E bars for PT3~#5E and ABT2~#5E bars for PT4~#5E bars shown for the parapet.

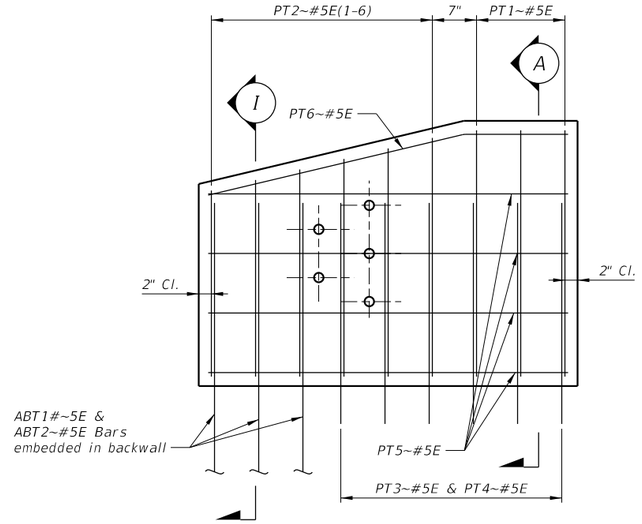

PARAPET REINFORCING ELEVATION

BILL OF REINFORCING STEEL

FOR ONE PARAPET ONLY
(ALL DIMENSIONS ARE OUT TO OUT)

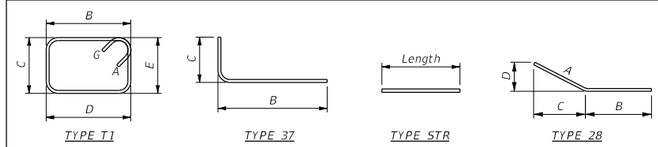

Mark	Size	Type	Length	A	B	C	D	E	G	N
PT1	#5E	T1	9-3	5½"	11"	3-3	11"	3-3	5½"	
PT2-1	#5E	T1	7-8	5½"	11"	2-5½	11"	2-5½	5½"	
PT2-2	#5E	T1	7-11	5½"	11"	2-7	11"	2-7	5½"	
PT2-3	#5E	T1	8-2½	5½"	11"	2-8¾	11"	2-8¾	5½"	
PT2-4	#5E	T1	8-6	5½"	11"	2-10½	11"	2-10½	5½"	
PT2-5	#5E	T1	8-9	5½"	11"	3-0	11"	3-0	5½"	
PT2-6	#5E	T1	9-0½	5½"	11"	3-1¾	11"	3-1¾	5½"	
PT3	#5E	37	4-11		2-0	2-11				
PT4	#5E	37	2-11		10"	2-1				
PT5	#5E	STR	4-8							
PT6	#5E	28	4-10	3-5½	1-4½	3-4½	9¾			
ABT1	#5E	STR	4-6							
ABT2	#5E	STR	3-7							

RAIL DESIGN CAPACITY

	Parapet
Rw	86 kips
Lc	6'-2"
Mc	292 kip*in/ft

NOTES

GENERAL: See Std. Dwg. No. SBR-OR42 for additional rail details.

REINFORCING STEEL: All parapet reinforcing steel is epoxy coated.

PAYMENT: Include all costs associated with furnishing and placing reinforcing steel in the parapet in the unit price bid for Reinforcing Steel - Epoxy Coated.

Include all costs associated with furnishing and placing Concrete - Class Deck in the parapet in the unit price bid for 42 IN Open Rail Parapet - Br.

Use structural steel for the shoes meeting the requirements of AASHTO M270 Grade 50. Include all costs associated with furnishing and installing parapet shoes in the unit price bid for 42 IN Open Rail Parapet - BR. Estimated weight = 78.7 lb / per shoe

EXCEPTIONS: Use details shown on this drawing only as they apply to the project. Anchorage details may vary. Refer to other drawings for variations in thise details.

RAIL WEIGHT: For informational purposes only.
Parapet Weight = 2807 lb
Parapet Volume = 18.7 cu. ft

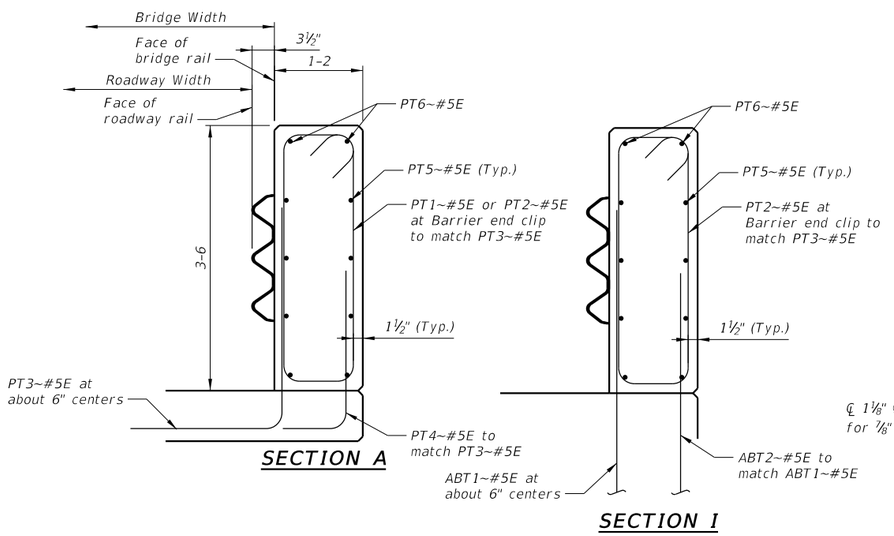

SECTION A

SECTION I

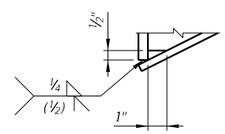

DETAIL F

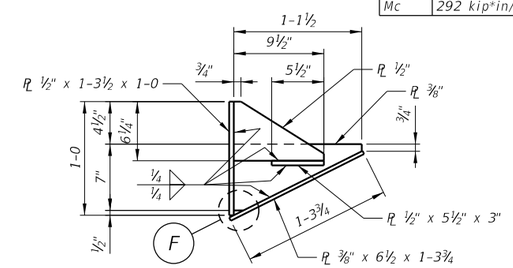

SECTION B

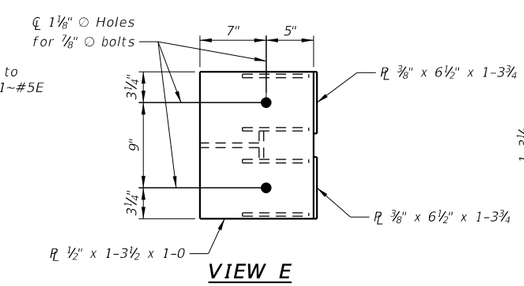

VIEW E

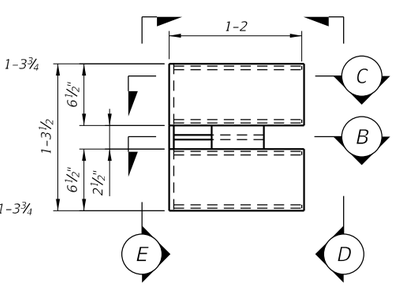

PARAPET SHOE ELEVATION

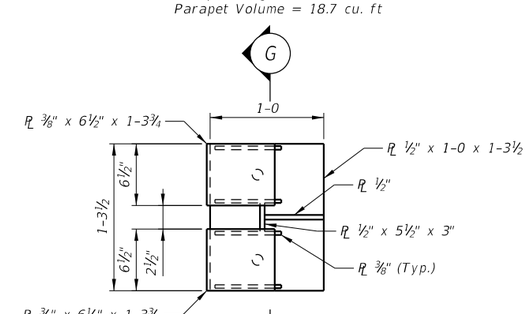

VIEW D

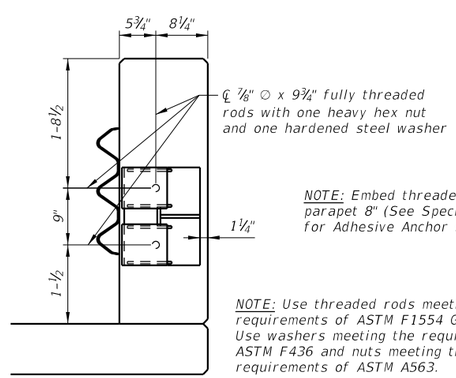

NOTE: Embed threaded rods into parapet 8" (See Special Provisions for Adhesive Anchor specifications)

NOTE: Use threaded rods meeting the requirements of ASTM F1554 Grade 105. Use washers meeting the requirements of ASTM F436 and nuts meeting the requirements of ASTM A563.

VIEW H

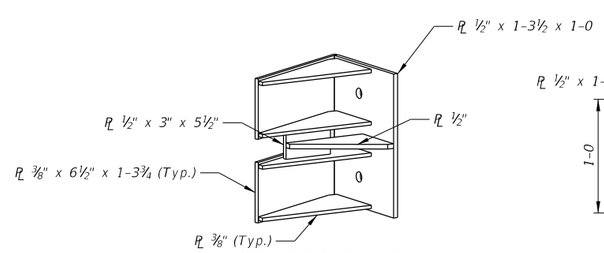

ISOMETRIC VIEW

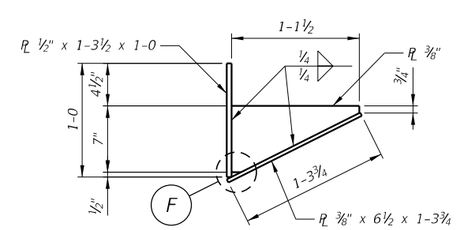

SECTION C

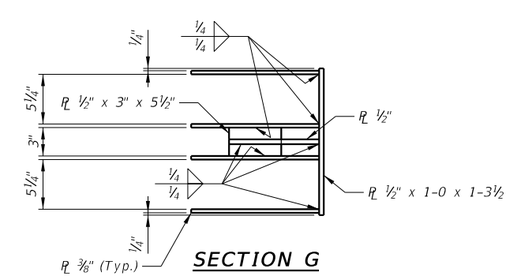

SECTION G

STANDARD BRIDGE RAIL
TYPE OPEN RAIL 42"
PARAPET

No Scale

MONTANA MDT DEPARTMENT OF TRANSPORTATION
BRIDGE BUREAU

REVISED					
REVISED					
REVISED					
REVISED					
APPROVED	9-17-19	N.A.H.			
CHECKED	2-7-19	L.M.M.			
DRAWN	3-14-18	T.J.B.			
$DATE$	$TIME$	$FILEABBREV$			

DRAWING NO.
SBR-OR42-PP